Technical Regulations for GT2 Grand Touring Cars

- 2026 -

ARTICLE 1 : DEFINITIONS

1.1 Bodywork
All entirely sprung parts of the car in contact with the external air stream, except the parts definitely associated with the mechanical functioning of the engine, transmission and running gear.
Any air intake shall be considered to be part of the bodywork.

1.2 Original
As fitted to the SRO Motorsports Group-approved series-produced car and in compliance with their Technical Form.

1.3 Event
An event shall consist of official practice(s) and the race(s).

1.4 Weight
Is the weight of the car without the driver at any time during the event and its eventual ballast.

1.5 Racing weight
Is the weight of the car in running order with the driver aboard and the quantity of fuel in its tank.

1.6 Wheel
Wheel: Flange and rim.
Complete wheel: Flange, rim and tyre.

1.7 Cockpit
Closed car : The interior volume of the main structure which is reserved for the occupants.
Its limits are defined by the roof, the floor, the doors, the lateral parts, the glazed parts and the front and rear bulkheads.
Open car : The cockpit opening must be symmetrical as viewed from above, and nothing is permitted to cover it except for a hood or a hard-top.

1.8 Supercharging
Increasing the weight of the charge of the fuel/air mixture in the combustion chamber (over the weight induced by normal atmospheric pressure, ram effect and dynamic effects in the intake and/or exhaust system) by any means whatsoever.
The injection of fuel under pressure is not considered to be supercharging.

1.9 Semi-automatic gearbox
One which, when the driver calls for a gear change, takes over the control of one or more of the engine, clutch and gear selectors momentarily to enable the gear to be engaged.

1.10 Location
A site defined relative to the original: centre line of the car, axles centre (middle of the wheelbase on the centre line), cockpit, luggage compartment and engine compartment.
Location within the engine compartment is a site defined relative to the crank case and cylinder head(s).

1.11 Position
The site defined by dimensions from the original vehicle data, e.g. axles centre and centre line of the car.

1.12 Orientation
Is the relationship of the component to the longitudinal and transversal axes of the vehicle. If the component is turned 180°, this will be regarded as a change in orientation.

1.13 Telemetry
The transmission of data between a moving car and anyone connected with the entry of that car.

1.14 Technical Form
All cars approved by SRO Motorpsorts Group will be the subject of a descriptive form called Technical Form issued by the RACB on which shall be entered all data enabling identification of the said model The presentation of the forms at scrutineering and/or at the start may be required by the organisers who will be entitled to refuse the participation of the entrant in the event in case of non-presentation.
The form presented must imperatively be printed on "RACB stamped" paper, signed by the SRO GT2 Bureau and be joined with a SRO Technical Department certificate on which the chassis number and owner of the car are mentioned.
The form presented must imperatively be printed on "RACB stamped" paper and signed by the SRO GT2 Bureau
Should the date for the coming into force of a Technical Form fall during an event, this form will be valid for that event throughout the duration of the said event.

In case of any doubt remaining after the checking of a model of car against its Technical Form, the scrutineers should refer either to the maintenance booklet published for the use of the make's distributors or to the general catalogue in which are listed all spare parts.

In case of lack of sufficient accurate documentation, scrutineers may carry out direct scrutineering by comparison with an identical part available from a concessionaire.

It will be up to the competitor to obtain the Technical Form concerning his car from the SRO GT2 Bureau.

ARTICLE 2 : REGULATIONS

2.1 Role of the SRO
The following technical regulations for the GT2 type Grand Touring Cars are issued by SRO Motorsports Group.

2.2 Vehicle type eligibility
Vehicles will be eligible in the GT2 Grand Touring class.
For a vehicle to be eligible in the GT2 type Grand Touring class, it must be a car approved by SRO Motorsports Group and homologated by the RACB in GT2.

2.3 Eligible cars
The list of approved cars will be published by SRO Motorsports Group.

2.4 Regulation and eligibility amendments
RACB will publish any changes made to these regulations. All such changes will come into effect after their publication. Changes for safety reasons may be made without notice.

2.5 Compliance with the regulations
The car entered by a competitor must conform strictly to its Technical Form as well as to any additional notification from the SRO GT2 Bureau.
It is the duty of each competitor to satisfy the Scrutineers and the Stewards of the Meeting that his car complies with these regulations in their entirety at all times during an event.
A car, the construction of which is deemed to be dangerous, may be excluded by the Stewards of the meeting.

2.6 Measurements
All measurements must be taken while the car is stationary on a flat horizontal surface or as stated in the Sporting Regulations or supplementary regulation of the relevant Series.
Before the start of an Event, the scrutineers stipulate the place where the ride height and weights will be checked. It's the competitor's responsibility to inform him about this place.
The competitor has the possibility, during the time set up by the organiser, to ensure the conformity of his car by using the official control equipment, at the official place of scrutineering.

2.7 Material
Titanium is not permitted unless used in the original part or explicitly authorised by these regulations or by SRO GT2 Bureau.
The use of a material which has a specific yield modulus greater than 40 GPa/g/cm^3 is forbidden for the making of all parts that are free and specific part of the GT2 version.
This restriction does not concern the parts homologated with the standard vehicle.
The use of magnesium sheet less than 3 mm thick is forbidden.

2.8 Data logging
The car should be fitted with a SRO data logging system. SRO Motorsports Group can ask to add some extra sensors to provide additional data.
The data thus collected must remain at the disposal of the SRO GT2 Bureau which is used for scrutineering and the GT2 Series organisation for driving conduct during the races and practices.
The competitor is responsible for the good functioning of this system.

The Technical Delegate can be assisted by technicians specialised in electronic systems in order to ensure the correct operation and the conformity of the readings of the SRO data logging system and the conformity of the various systems with which the cars are equipped.

They may at any moment remove, exchange or control the various electronic components of a car and draw up a report to the Technical Delegate on their investigations, and they reserve the right to keep the components they have removed for later analysis.

No protest will be accepted concerning these controls and removed components. If a case of non-conformity is noted (either during or after the Event), the customary procedures will apply (a report will be drawn up by the Technical Delegate on approval of the Chief Scrutineer and forwarded to the Panel of Stewards for a decision).

The SRO-approved data logger must work throughout the Event, including during every practice, and controls may be carried out at any time. Competitors cannot leave the Event before their data loggers have been downloaded or unless the Stewards have given their consent for them to leave.

2.9 Telemetry
The use of telemetry is forbidden.

ARTICLE 3 : BODYWORK

3.1 Bodywork

All bodywork dimensions and shape must remain original, as homologated by the Manufacturer. Any non-movable element must be attached with the use of tools.
The front and rear overhangs must remain original.
Material used for the bonnet and boot lids, bumpers, doors and wings must remain original or as described on the technical form of the car. Where an element is replaced, it must be attached in a way which is at least as strong as the original method and any non moveable element shall be attached with the use of tools.

3.1.1) Bonnet and boot lids

They must have at least two safety fasteners, both of which are clearly indicated by red (or contrasting colour) arrows. It must be possible to remove or open them without the use of tools. A waiver by the SRO Technical Department can be given for special constructions. These constructions must be described in the homologation form

3.1.2) All bodywork joints in the vicinity of the refueling connections must be designed in such a way as to prevent any leakage of fuel into the engine compartment and/or cockpit during refueling.

3.2 Windscreen and windows

In order to protect the windscreen, the addition of a maximum of 4 translucent films on its external face is permitted.

Additional fastenings may be used for securing the windscreen.
The side and rear windows may be replaced with polycarbonate.

Onto the inside surface of the side windows in glass, a colourless and translucent anti-shatter film (such as SL Lumar Safety Film/D1570) of 0.1 mm maximum must be installed, in order to guarantee an appropriate protection in case of splintering.

<u>Cockpit ventilation:</u>
In order to extract air from the cockpit, the rear window may have a maximum of 5 circular holes with a maximum diameter of 50 mm each.
A cut-out of a maximum surface of 25 cm^2 is authorised in each rear view mirror.
A scoop may be fitted to each door window, provided that it complies with the following points:
- it must not exceed the perimeter of the window, must have a maximum height of 150 mm and must not protrude more than 50 mm over the window's surface.
- it must be made from the same material as the window or from translucent polycarbonate if the window is made from glass, and must be able to be closed by a shutter made from the same material as the window.
- it must not obstruct the driver's rearward view.

Air ducts fed by the scoops are authorised inside the cockpit on condition that they reduce neither the visibility nor the safety of the driver.

Each rear side window may be partly opened to a maximum of 30 mm at its rear extremity, or may have a circular opening with a maximum diameter of 50 mm.

<u>Protective nets :</u>
a) Net:
A protective net is compulsory if the car is not equipped with racing net complying with art 14.7.
It must meet the following specifications:
- the net must be made up of woven strips at least 19 mm (3/4") wide;
- the meshes must be a minimum of 25 x 25 mm and a maximum of 60 x 60 mm. The woven strips must be non-flammable and sewn together at each point of crossing. The net must not be of a temporary nature.
- viewed from the side, it must reach from the centre of the steering wheel to the B-pillar.

b) Fixation:
The net must be attached either to the safety cage or to a fixed part of the bodywork, above the driver's window, by means of a rapid release system that will function even if the car turns over.

It must be possible to detach the net with one hand.
To this end, the handle or lever must have coloured markings ("dayglo" orange).
A push-button release system is authorised provided that it respects the prescriptions of this article.
The push-buttons must be visible from the outside, be of a contrasting colour and be marked "press".

3.3 Door protection

The removal of door soundproofing material is allowed with no other modification.

Installation of foam to protect against lateral collisions homologated in VO is mandatory.

3.4 Aerodynamic devices

The SRO GT2 Bureau reserves the right to adjust the characteristics of the homologated aerodynamic devices in order to maintain the balance of performance between cars.

ARTICLE 4 : WEIGHT

4.1 Minimum weight
The SRO GT2 Bureau reserves the right to adjust the minimum weight of any car in order to maintain the balance of performance between the cars. The minimum weight must be respected at all times during the event, in particular when the car crosses the finish line. It is permitted to complete the weight of the car by one or several units of ballast.

4.2 Ballast
Ballast must be secured according to the specifications of Article 253-16 concerning the dimensions and characteristics of the fixations.
The securing system must allow seals to be affixed to the ballast by the scrutineers and must be designed such that tools are required for its removal.
Any movable ballast system when the car is in motion is forbidden.

4.3 Levelling Ballast / Crew handicap / Success Ballast
The levelling ballast and/or crew handicap and/or Success Ballast (only the weight of the stacking metallic plates) must, in addition to the requirements of Article 4.2, comply with the following points:
- It must be made from stacking metallic plates according to Drawing n° 257A-1
- The plates must be firmly attached inside a housing by means of 5 M12 screws.
- The height of the stacking plates is limited at 15 cm.
- This ballast must be secured in the cockpit in the passenger's location.

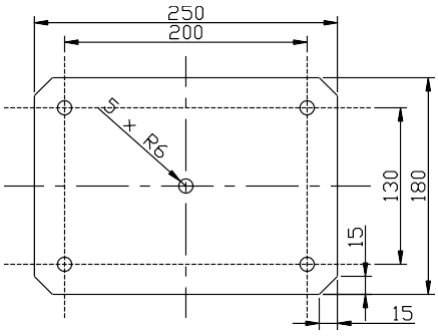

257A-1

4.4 Adding during the race
The adding to the car during the race of any solid material whatsoever, and the replacement during the race of any part of the car with another which is materially heavier, are forbidden.

4.5 Liquids
The weight may be checked at any time during the event with the quantity of liquids remaining in the tanks, except after the race when the car may be emptied of all the fuel and water from water spray system before weighing.

ARTICLE 5 : ENGINE

5.1 Engine control unit
The Technical Delegate may at any time oblige the competitor to use the reference unit registered with the SRO Motorsports Group by the Manufacturer or Tuner.

5.2 Intake system
5.2.1) The intake system is defined by the assembly comprising the restrictor(s) (if applicable) and the manifold up to the intake ports on the cylinder head(s).
5.2.2) All the air feeding the engine must pass through the homologated air restrictors (if applicable), and no pipe containing air is permitted to enter or to exit from the intake system.
The restrictor(s) must be made of metal or metal alloy, 3 mm long and must be entirely visible once the bonnet is open and without dismounting any element or cover.
Sealing the restrictors must cause the engine to stop immediately.
This check must be carried out at an engine speed of 2500 rpm, the pressure sensors present inside the intake system being disconnected.
The depression measured in the intake system when the engine stops must be at least equal to the atmospheric pressure in the place where the check is carried out minus 150 millibar, maintained during at least 0.5 seconds.
5.3.3) The SRO GT2 Bureau reserves the right to adjust the diameter of these air restrictors (if applicable) in order to maintain the balance of performance between the cars.

5.3 Exhaust
5.3.1) The exhaust system must incorporate one or more homologated catalytic converters, which should be functioning at all times and through which all exhaust gases should pass.
5.3.2) The noise generated by the car must not exceed 110 dB (A) at 3800 rpm, or at three-quarter maximum revs if this is less.
This measurement will be taken at a distance of 0.5 m and at a 45 degree angle to the point of exit of the exhaust.
All measures taken to ensure that the maximum noise limits are not exceeded must be permanent in nature, and must not be cancelled out by the exhaust gas pressure.

Exhaust gas may only exit at the end of the system.
Parts of the chassis must not be used to evacuate exhaust gases.
Exhaust line protection are allowed.

ARTICLE 6 : FUEL SYSTEM, REFUELING

6.1 Refueling during the race (only for 2 and 3 hours races)

Refueling the car by any other means than gravity, with a maximum height of 2 meters above the track where the refueling takes place, is forbidden throughout the competition.

Refueling may only be carried out using either a churn of no more than 25 litres capacity equipped with a self seal connection and closed loop breathing system or a refueling rig in compliance with FIA requirements.

During the race, only one autonomous supply tank complying with the Drawing 252-7 must be used per car.
This tank must have a simple cylindrical internal shape and must not have any additional internal parts.
It must not be pressurized.
For safety reasons, this tank must be fixed, through a tower, onto a trolley with the following characteristics :

- All the tower components must be mechanically assembled without any degree of freedom in relation to the trolley
- The base of the trolley must have a surface area of at least 2 m2 and must be made with a case fitted on 4 self-braking castors, ballasted with a weight greater than that of the tank filled with fuel.

A system for weighing the fuel may be applied through placing a weighing plate underneath the tank, provided that the characteristics set out above are respected.

An arm for supporting the refueling lines and air hoses may be attached to the trolley :
- It must be independent of both the tank and the tower
- It is recommended that this arm be allowed a degree of freedom in relation to the trolley (rotation following a vertical axis)
- It must not exceed 4 m in length and must allow a free passage of a height of 2 m over its entire length, including the accessories

- An identification plate bearing the race number (recto/verso) of the competing car must be fixed to its end.

A flow restrictor with the following dimensions :
- Thickness : 2 mm
- Maximum internal diameter : 33 mm

must be placed at the exit of the refueling tank (see Drawing 257A-2).
Above the tank there must be an air vent system approved by the FIA.
The refueling pipe, minimum length 250 cm (flexible part only), must be provided with a leak-proof coupling to fit the filler mounted on the car.
During refueling the outlet of the air vent must be connected to the supply tank with an appropriate coupling of the same diameter.

Before refueling commences, the car and all metal parts of the refueling system, from the coupling to the supply tank and its rack, must be connected electrically to earth by a manual contactor having no other function.

A 90° cut-off valve, situated on the outlet of the supply tank and controlling the fuel flow, must be manned at all times during refueling.

A self-closing valve with an internal diameter of 38 mm must be fixed under the supply tank according to Drawing 252-7.
All hoses and fittings from the supply tank to the car and back must have a maximum inside diameter in compliance with Drawing 252-5 (1.5 or 2.0 inches maximum for version A).
A visible level equipped with isolating valves fitted as close as possible to the tank must be mounted to the tank.

The storing of fuel on board the car at a temperature less than 10°C below the ambient temperature is forbidden.

The use of a specific device, whether on board the car or not, to reduce the temperature of the fuel below the ambient temperature is forbidden.

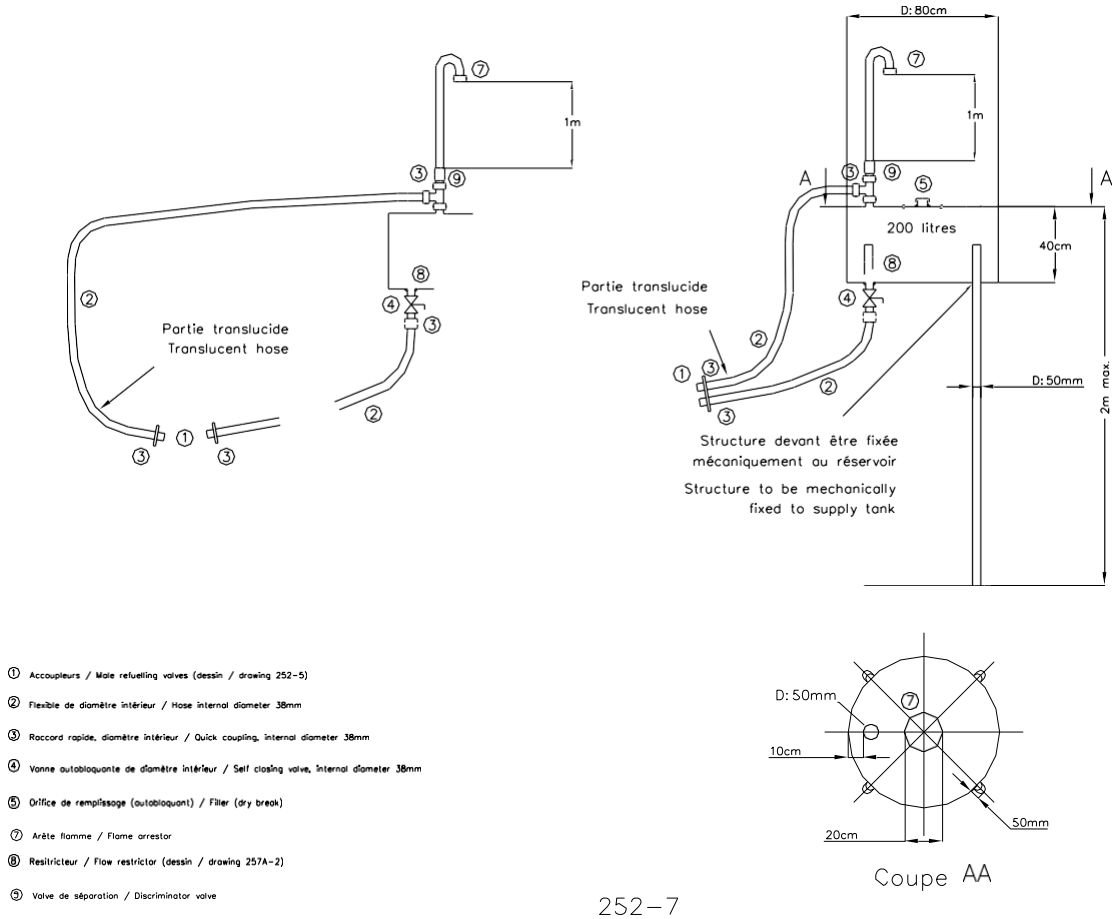

252-7

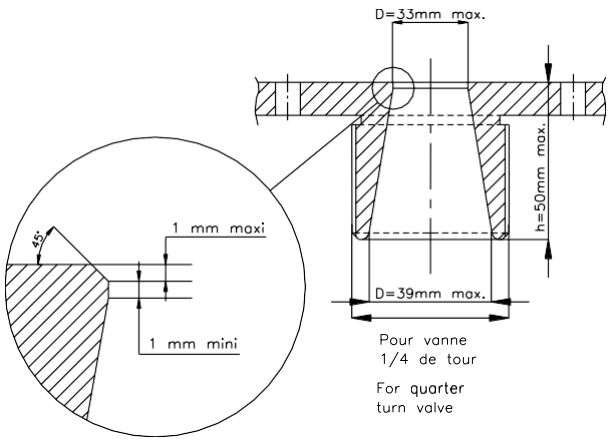

257A-2

6.2 Fuel capacity

The SRO GT2 Bureau reserves the right to adjust the capacity of the fuel tank in order to maintain the balance of performance between the cars.

6.3 Fuel tanks

All fuel tanks must be conforming to or exceeding the specifications of FIA FT3-1999, FT3.5-1999, FT5-1999 or FIA Standard 8875-2025 Safety Fuel Tanks, and must comply with the prescriptions of Article 253-14. They must be placed in the original location or in the luggage compartment.
All fuel lines must comply with the specifications of Article 253-3.
It is compulsory that the tank be filled with MIL-B-83054, SAE-AIR-4170 (MIL-F87260 recommended in case of quick refueling) type safety foam. Any fuel fitting which is part of the tank walls (air vents, inlets, outlets, tank fillers, inter tank connectors and access openings) must be made of metal or composite and bonded into the fuel tank.
The fuel tank must be contained in a flameproof and liquid-proof housing that has no other mechanical function.
This housing must include a crushable structure** on all surfaces, unless positioned within and protected by the main

structure/chassis.
The bottom part of the housing may be made of the flat bottom, provided that it complies with the specifications of the crushable structure1.
Compulsory for cars homologated as from 01.01.2026
Recommended for all cars
No part of the fuel bladder, including its flanges, must be rigidly fixed to the housing in which it is contained; the fixings must be designed so that if the fuel bladder is pulled away from the housing, the attachment will fail without compromising the integrity of the fuel bladder.

Automatic fuel cut-off
All fuel feed pipes going to the engine must be provided with automatic cut-off valves located directly on the fuel tank which automatically close all the fuel lines under pressure if one of these lines in the fuel system is fractured or leaks. All the fuel pumps must only operate when the engine is running, except during the starting process.

6.4 Filling and venting device

Coupling must comply with the basic homologation form or the VO form for endurance.
They may be either combined or single units fitted on both sides of the car.
For races where refueling take place, they must be equipped with leak proof dry break couplings complying with the dead man principle (without retaining device when in an open position).
Couplings dimensions:
Appendix J - Diagrams 252.5 .A with internal diameter D ≤ 2" or Diagrams 252.5.B.
Locations :
Above the complete wheels, within the track of the nearest axle, where they are not vulnerable in the event of an accident.

They must not protrude beyond the bodywork surface.
They must be located at least 300 mm rearwards from a vertical line passing by the rearmost point of the exhaust pipe exits (not applicable in case of rear exit) and in any case, so that eventual fuel spilling do not result in fuel falling over the exhaust pipe.

Filling devices may be installed in the side rear windows provided they are separated from the cockpit and the engine compartment by a firewall.
The vent and filler spouts may pass through the cockpit as close to the walls as possible.
Their pipes must be made from metal or flame resistant / flame retarding material[1]*, and their connectors from material identical to that used for the walls of the tank.
They must be isolated from the cockpit by means of a leak-proof protection.

6.5 Fuel samples
All cars must be fitted with a self-sealing connector which can be used by the Scrutineers to obtain samples of the fuel feeding the engine.
This connector must be of the type approved by the FIA.

ARTICLE 7: LUBRICATION SYSTEM

7.1 Catch tank
When a car's lubrication system includes an open type sump breather, it must vent into a catch tank of at least 3 litres capacity fitted with a visible level gauge.

ARTICLE 8: ELECTRICAL EQUIPMENT

8.1 Battery
Batteries may be situated in the cockpit but without obstructing the exit of the driver.
If the battery situated in the cockpit is a wet battery, it must be completely surrounded by a box mode of insulating material that includes an air vent which exits outside the cockpit.
If the battery situated in the cockpit is a dry battery, the terminal must be electrically protected with an insulating cover.
The attachment to the body shell must consist of a metal seat and two metal clamps, with an insulating covering, fixed to the floor by bolts and nuts.
For attaching these clamps, bolts with a diameter of at least 10 mm must be used, and under each bolt, a counterplate at least 3 mm thick and with a surface of at least 20 cm^2 beneath the metal of the bodywork (see Drawings 255-10 and 255-11). Alternatively, it is allowed to homologate one specific securing system provided it is able to withstand a deceleration of 25g for a given battery maximum weight.

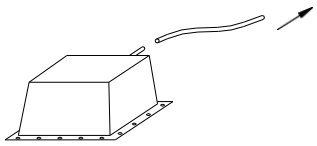

** Crushable structure :
Sandwich construction with a minimum thickness of 10 mm, made of a core (minimum crushing strength of 18N/cm2) and of two skins of 1.5 mm minimum thickness (minimum tensile strength of 225N/mm2).
Composite material authorised.

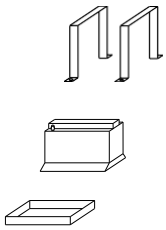

255-10

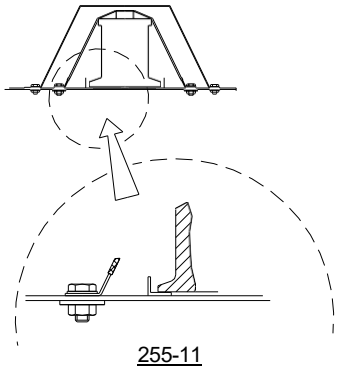

255-11

8.2 Windscreen wiper
The car must be fitted with a windscreen wiper system, which must be in working order throughout the event.
Only the blades may be replaced.
The capacity of the windscreen washer tank may be modified.

8.3 Starting
A starter must be fitted and be in working order at all times during an event.
The driver must also be able to operate the starter when seated normally.

8.4 Lighting equipment
8.4.1) All lighting equipment must be in working order throughout the event.
8.4.2) The exterior lighting equipment must at least ensure the following functions :
Headlights, direction indicators, stop lights, rain light (see 8.4.4) and rear sidelights.
For safety reasons, it is obligatory for headlights to produce a white beam.
For races run in the daytime, GT2 cars must be equipped with white headlight covers.
For races run at night, the front bumper may be modified to accommodate supplementary lighting.
These modifications must not create any aerodynamic downforce.
8.4.3) Reversing lights:
The bulbs of the reversing lights must be removed.
8.4.4) Rain lights:
One rain light approved according to the ECE R38 road standard (or an equivalent or stricter standard from another country) or approved by the FIA (Technical List n°76) is compulsory at the back of tha car and it must be in working order throughout the event.
It must be :
- a model approved by the FIA (Technical list n°76), or an original third stoplight,
- directed to the rear at 90° to the car centre line
- clearly visible from the rear,
- mounted not more than 10 cm from the car centre line,
- at least 35 cm above the reference plane,
- at least 45 cm behind the rear wheel centre line, measured to the face of the lens and parallel to the reference plane, or as on the series-produced car,
- able to be switched on by the driver when seated normally in the car,

The three measurements are taken to the centre of area of the lens.

ARTICLE 9: TRANSMISSION

9.1 Transmission system
For cars fitted with a semi-automatic or automatic gearbox and with 6 ratios or more, and/or a power-driven clutch with electronic or pneumatic control, a waiver of the SRO GT2 Bureau can eventually be granted. By this the Technical Delegate may, at any time oblige, the competitor to use the reference unit(s) registered with the SRO Motorsports Group by the manufacturer or tuner.
For safety reasons, the transmission must be designed in such a way that if the car is stopped and the engine is stalled, it is possible to push or tow it.
If needed, a protection for gearbox components can be authorised, after approval by the SRO GT2 Bureau.

9.2 Reverse gear
All cars must have a reverse gear which, at any time during the event, can be selected while the engine is running and be used by the driver when seated normally.

ARTICLE 10 : AXLES, SUSPENSION AND STEERING

10.1 Ride height
The SRO GT2 Bureau reserves the right to adjust the ride height in order to maintain the balance of performance between the cars.
For the checking of the ride height, the pressure of the tyres must not be less than 1.5 bars. If the pressure is less than 1.5 bars when scrutineering, the pressure may be raised to maximum 1.5 bars.

10.2 Suspension type and mounting

10.2.1) All suspension components, with the exception of parts specifically mentioned below must be original equipment supplied by the manufacturer and comply with the Technical Form.
10.2.2) The position of the suspension and the steering box (rack or other) anchorage points on the chassis must be as original.
10.2.3) The addition of an anti-roll bar (adjustable or not) in the front as in the rear is permitted. Those will be mentioned in the Technical Form.
10.2.4) Shock absorbers are mentioned in the Technical Form and must comply with it. The working principle (adjustable (maximum 3 ways) or not) is free. A maximum of 3 front springs and 3 rear springs can be homologated.
For cars homologated before 01/01/2022, front and rear springs from different set can be mixed.
The shock absorber reservoir and its possible line must be completely isolated from the cockpit or covered and may not be located in a compartment giving access to the ventilation system of the car.
No electrical, hydraulic or pneumatic connection between the shock absorbers is permitted.
The modification of spring, shock absorber and anti-roll bars adjustments from the cockpit is prohibited.

10.3 Steering
Steering Column : Adjusting system authorized, anti-theft device (steering lock) forbidden.

The steering wheel may be fitted with a quick release system.
The quick release mechanism may consist of a flange concentric to the steering wheel axis, coloured yellow through anodizing or any other durable yellow coating, and installed on the steering column behind the steering wheel. **The release must be operated by pulling the flange along the steering wheel axis.**

10.4 Power steering
For cars fitted with an automatically variable power steering, the Technical Delegate may at any time oblige the competitor to use the reference unit registered with the SRO Motorsports Group by the manufacturer or tuner.

ARTICLE 11 : BRAKES

11.1 Hydraulic circuits and tanks
The complete braking system must incorporate at least two separate circuits operated by the same pedal.
This system must be designed so that if leakage or failure occurs in one circuit, the pedal shall still operate the brakes on at least two wheels.
The brake fluid tanks may be fixed inside the cockpit, on condition that they are securely fastened and protected.
The balance of the braking forces between the front and rear axles may (if homologated) be adjusted by the driver, through:
- a direct and manual intervention on a mechanical system allowing the modification of the position of the centre of the joint, on the linkage lever of the hydraulic pumps of the front and rear circuits, mounted on the original pedal unit.
- a direct and manual intervention on a proportional valve, in which the intake pressure of the rear circuit is adjusted through a pre-loaded spring, variable according to the position of the manual linkage system (see the Drawing of the principle 263-9).

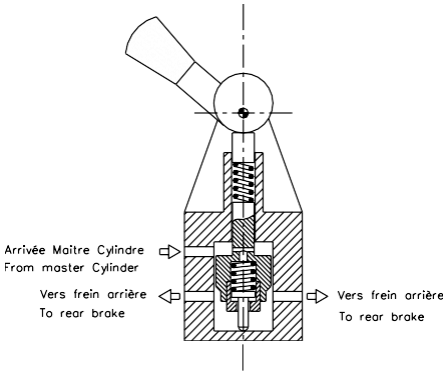

263-9

Only one of these two systems is permitted.

11.2 Anti-lock braking and power braking
For cars fitted with anti-lock and/or automatically variable power braking systems, the Technical Delegate may at any time oblige the competitor to use the reference unit registered with the SRO Motorsports Group by the manufacturer or

tuner.

11.3 Cooling of brakes

Brake cooling duct are free, Brake cooling openings in the bodywork must be homologated. Openings and cooling channels of the brake must be homologated.
The air pipes must not go beyond the perimeter of the car, seen from above.

ARTICLE 12 : WHEELS AND TYRES

12.1 Dimensions and materials
The SRO GT2 Bureau reserves the right to adjust the width of the complete wheels in order to maintain the balance of performance between the cars.
Measurements will be taken horizontally at axle centre line height.
Wheel must be made of aluminium alloy.

12.2 Wheel visibility
The bodywork must project over the upper half of the wheel in such a way as to cover efficiently at least one third of their circumference and at least the entire width of the tyre. These criteria must be met with the wheels aligned for the car to proceed straight ahead.
Aft of the rear wheels, the bodywork must descend below the rear wheels centreline.

12.3 Wheel attachment
If a single wheel nut is used, a safety pin fitted with a spring must be in place on the nut or the stub axle whenever the car is running and must be replaced after each wheel change.
These pins must be painted "dayglo" red or orange.

Air extractors added on the wheels are forbidden.

12.4 Pressure control valves
Pressure control valves on the wheels are forbidden.

12.5 Sensors
Only the following sensors are allowed.

- Homologated sensors:
  It is not allowed to install additional other sensor than those homologated for the management of the engine, gearbox, abs, traction control… location, number and function may not be modified.

- Scrutineering sensors:
  Sensors required by the art **Error! Reference source not found.**

- TMPS sensors:
  Sensors for measuring the pressure and the temperature of the tyres when the car is in motion are strongly recommended.
  If these sensors are used, there must be at least one warning signal to notify the driver of a probable tyre failure.

12.6 Pneumatic jacks
Pneumatic jacks are recommended and may be attached to the safety cage, but compressed air bottles are not to be carried on board.
Minimum openings allowing the use of air jacks are authorised
The bodywork may be modified over a maximum area of 100 cm^2 as to create a housing for this connector.

ARTICLE 13 : COCKPIT

13.1 Equipment permitted in the cockpit
13.1.1) The only components which can be added in the cockpit are:
- Safety equipment and structures
- Tool kit
- Seat, instruments and any other controls necessary for driving including the brake power distributor switch
- Electronic and electrical equipment
- Driver cooling system
- Ballast
- Pneumatic jacks and their pipes
- Battery
- Driver ventilation equipment

13.1.2) None of the above items may hinder cockpit exit or the driver's visibility.
13.1.3) The above components must be covered where necessary by a rigid protective material to minimise injury, and their mountings must be able to withstand 25 G deceleration.

13.2 Cockpit exit time
The driver, seated in his normal driving position, must be able to get out from the cockpit in 7 seconds through the driver's door and in 9 seconds through the passenger's door.
For the purposes of these tests, the driver must be wearing all normal driving equipment, the seat belts must be fastened, the steering wheel must be in place in the most inconvenient position, and the doors must be closed.

13.3 Test for helmet removal
With the driver seated in his normal driving position in the car with which he/she is entered, wearing a cervical collar appropriate to his/her size and with the seat harness tightened, a member of the medical service must demonstrate that the helmet which the driver will wear in the race can be removed from his head without bending his neck or spinal column.

ARTICLE 14 : SAFETY EQUIPMENT

14.1 Fire extinguishers
The use of the following products is prohibited: BCF, NAF
All cars must be equipped with an extinguishing system homologated by the FIA in accordance with Article 253-7.2, except as regards the means of triggering.
A means of triggering from the outside, possibly combined with the circuit breaker and operated by a single lever, must be present at the bottom of the windscreen on the left side.
It must be marked with a letter "E" in red inside a red-edged white circle at least 100 mm in diameter.

14.2 Safety belts
Safety harnesses in compliance with FIA Standard 8853-2016 (Technical List n°57) are compulsory. The wearing of two shoulder straps, one lap strap and two crotch straps is compulsory.
It must have a minimum of six (-6) anchorage points.
The harness must be used in accordance with Article 253-6 of Appendix J.
Elastic devices attached to the shoulder straps are forbidden.

It is prohibited for the seat belts to be anchored to the seats or their supports.c
14.3 Rear view mirrors
The car must be fitted with two rear view mirrors, one fitted on each side of the car, in order to give an efficient view to the rear. Each mirror must have a minimum area of 100 cm².
The Scrutineers must be assured through a practical demonstration that the driver, seated normally, can clearly see the vehicles following him.
To this end, the driver will be asked to identify letters or figures, 15 cm high and 10 cm wide, displayed at random on boards placed behind the car according to the following instructions:

- Height: Between 40 cm and 100 cm from the ground.
- Width: 2 m one side or the other of the longitudinal centreline of the car.
- Position: 10 metres behind the centreline of the rear axle of the car.

14.4 Seats and headrest
14.4.1) The driver's seat must be homologated by the FIA according to FIA 8862-2009 Standard and not modified.
Seats homologated and mounted with seat-back mounting is recommended.
Maximum thickness of any cushion used between the driver and the homologated seat = 50 mm.
With the driver seated in his normal driving position, the eye line must be below the top edge of the side head support and above the bottom edge of the side head support.
The lateral distance between the helmet and the side head support (measured at 150 mm from the forward face of the side head support) must not be greater than 40 mm and may be adjusted by means of additional foam.
The material of the foam extension must be the same as the one in the head support of the given seat.
The fixation of the foam extension must be approved by the FIA. The use of the seat brackets (supports) homologated with the seat is compulsory. The seat mountings must be homologated by the car manufacturer.

The seat and/or the seat brackets must be mounted to on these mounting points by means of at least 4 M8 bolts of at least 10.9 quality (ISO standard).
The seat longitudinal centreline must not be less than 270 mm from the longitudinal centreline of the car (measured transversally).
If a foam insert is used between the homologated seat and the driver, minimum lateral support to the driver's head, shoulders and pelvis must be guaranteed as follows:
- 230mm min. at seat-side-head support along the head-plane.
- 180mm min. at seat-side-shoulder support along the shoulder-plane.
- 100mm min. in height at seat-side-pelvis support along the pelvis-plane over a length of 200mm min.

This requirement must be verified using a parallelepiped template of dimensions X 200 x Y 150 x Z 100 mm.

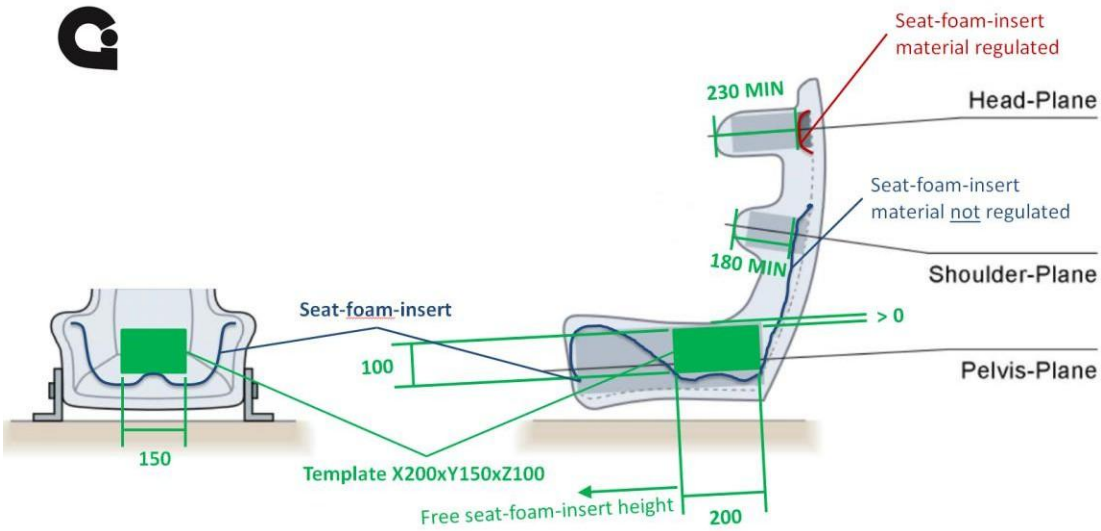

If the original attachments or supports are changed, they must comply with the provisions of article 253-16.

14.5 Master switch
The driver, when seated normally with the safety belt fastened and the steering wheel in place, must be able to cut off all the electrical circuits and stop the engine by means of a spark-proof master switch.
This switch must be clearly marked by a symbol showing a red spark in a white-edged blue triangle and be accessible by the driver with his safety belt fastened.
There must also be an exterior switch, which is capable of being operated from a distance.

The switch must be located at the lower part of the windscreen pillar on the left side of the car.

14.6 Towing eyes
All cars will be equipped with a rear and front towing device for all events.
It will be clearly visible and painted in yellow, red or orange.
It must allow the passage of a cylinder with a diameter of 60 mm.
It must allow the car to be towed on a dry surface (concrete or asphalt), by applying traction on a plane parallel to the ground, with an angle of plus or minus 15 degrees to the longitudinal centreline of the car.
This check, which may take place during preliminary scrutineering, must be carried out with the wheels blocked by means of the main braking system.
The car must be fitted with tyres of a type identical to that used during the event.

14.7 Racing nets

Racing nets are compulsory and must be homologated according to FIA 8863-2013 standard (FIA Technical List n°48). They must be attached to the homologated mounting points (see the homologation form of the car) and must be installed in accordance with the installation specifications published by the FIA. Quick release systems of both nets must be able to be opened by both the driver when seated in racing position with tightened seat-belts as well as by rescue crews.

ARTICLE 15 : SAFETY STRUCTURES

15.1 Safety cage
The safety cage must have no more than six mounting points, except if supplementary mounting points become necessary because of the use of the reinforcements allowed by the SRO GT2 Bureau . The safety cage must be certified or homologated by an ASN or homologated by the FIA. The cage used must be defined in VO.
An authentic copy of the homologation document or certificate, approved by the ASN and signed by qualified technicians representing the manufacturer, must be presented to the event's scrutineers.

Protective padding

Protective padding must be fitted in accordance to appendix J art 253 8.3.5.
The padding must comply with FIA standard 8857-2001, type A (see technical list n°23 "Roll Cage Padding Homologated by the FIA").

ARTICLE 16 : FUEL

16.1 Fuel specification
The fuel must comply with Article 252-9.1.

16.2 Air
Only air may be mixed with the fuel as an oxidant.

ARTICLE 17 : FINAL TEXT

The final text of these regulations is the English version, which shall be used should any dispute arise over their interpretation.

ARTICLE 18 : INBOARD CAMERA

An inboard camera system homologated by the GT2 Series organisation is mandatory.
The installation of this system must be made in strict accordance with the corresponding instructions and must work at all times during the Event. All competitors are themselves responsible for obtaining the system, for the correct installation and the correct functioning thereof.